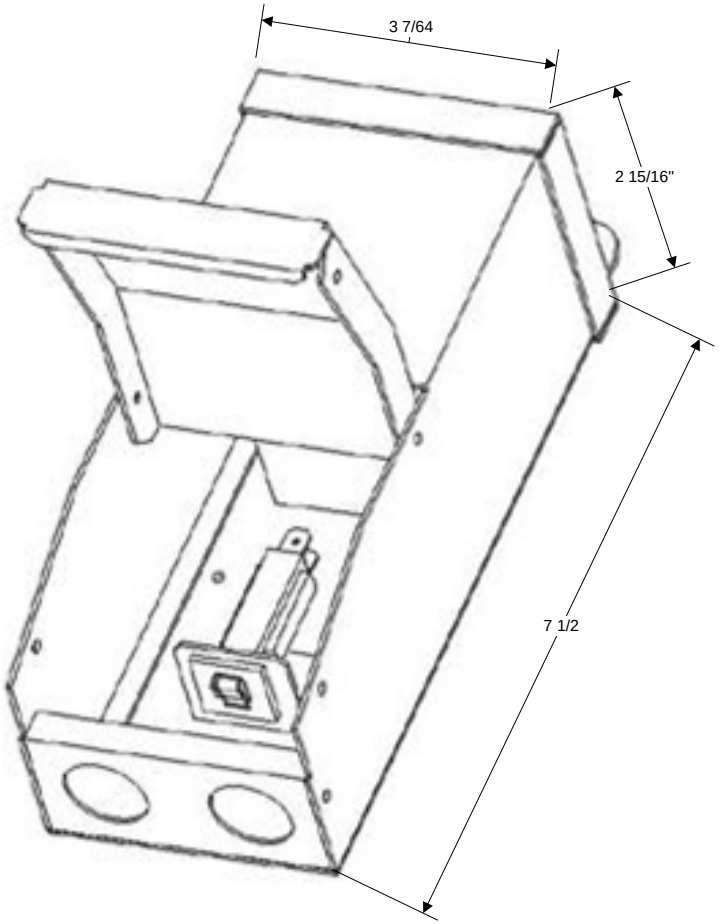

NOTES:

1. Output voltage in table 1 with 120VAC applied and fully loaded.
2. Maximum no load input current : 0.05A
3. Enclosure Temperature does not exceed 65ºC in a 40ºC ambient, fully loaded.
4. The actual transformer 5VA is encapsulated in the enclosure.
5. The transformer is dimmable with all dimmers that provide symmetrical form of the current under any condition.
6. Input and output leads are 18 AWG. Lead insulation is 105ºC. Output terminal block is optional.
7. The transformer uses a class B (130ºC) insulation system.
8. The transformer has auto-reset thermal 0.8A circuit breaker on the secondary side and 0.8A auto-reset breaker on primary side.
9. Wiring compartment has 3 knockouts sized for 3/4 inch screw cable connectors.
10. The wiring compartment cover hinged with rivets and opens vertically from bottom to top.
11. The enclosure, available in black powder coated or stainless steel is NEMA 3R rated.
12. The Transformer is UL listed. UL file number: E194005. model C-150
13. The label contains Technomagnet's catalog number and electrical rating.

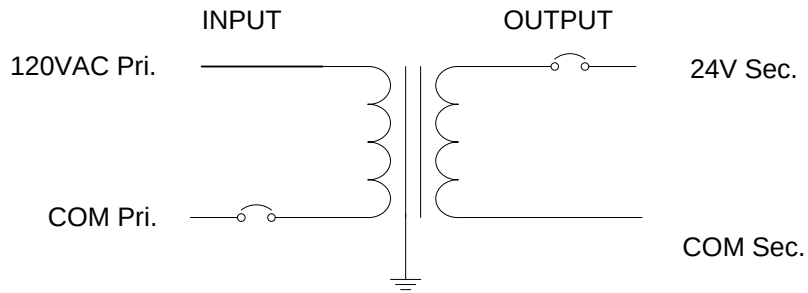

Table 1.

Output Volts	
120AC	
24	

TechnoMagnet LTD.
Interactive Lighting Servers

15547 Cabrito Road
Van Nuys, CA 91406

	NAME	DATE	SING.	PAGE____ OF_____	SCALE no scale
DRW.					TOLERANCE ±
CHK.				DESCRIPTION:	
APV.				Compact outdoor 24V 5VA Low voltage Transformer.	
PART No.	ODC5S24V		REV. A		